BOSS Process™

PEOPLE. PARTNERSHIP. PERFORMANCE.

Exceptional Rotary Valves for Every Application

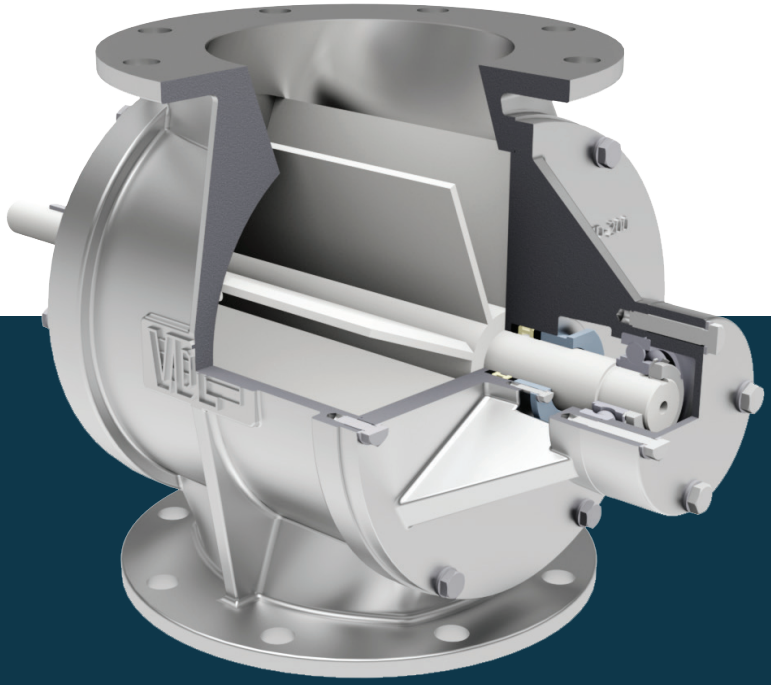

- Pneumatic conveying valves, gravity flow, metering and high-pressure sealing
- Valves for dust collection and cyclones, low-and high-pressure
- Explosion Isolation NFPA 69 compliant valves

NFPA

ISO 9001:2015 CERTIFIED COMPANY
PRI Registrar

Ex

www.bossproductsamerica.com

A division of BOSS PRODUCTS LLC

MD SERIES

Ideal for feeding, metering and pneumatic conveying applications

Sizes: 6”, 8”, 10” & 12”

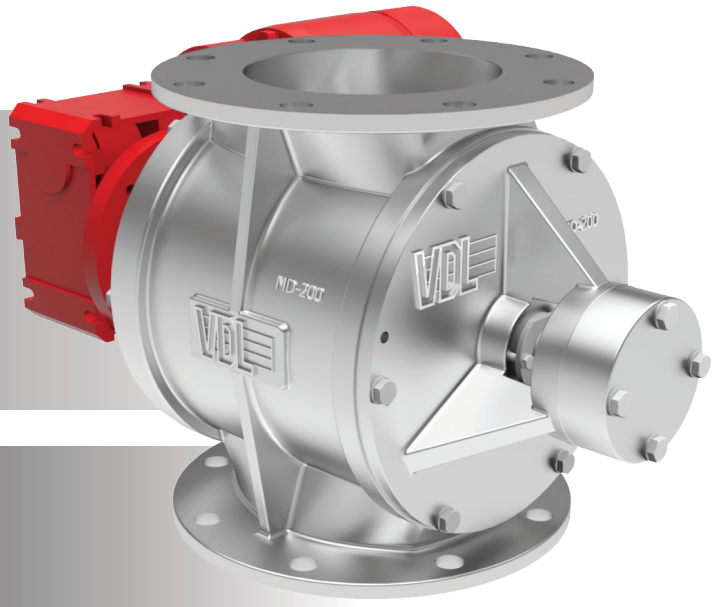

STANDARD FEATURES

- Manages differential pressure up to 15 PSI / 400” WC
- Shaft sealing with adjustable gland gasket
- Cast iron housing with flanged inlet/outlet
- Direct drive motor with gearbox
- 8 vane rotor with options for polyurethane tips, steel or stainless steel
- The Explosion version certified to withstand explosive pressures up to 36 PSI / 25 PSI (985” WC / 670” WC) with polyurethane tips

OPTIONAL FEATURES

- Variable speed drive control option
- Nickle plating or chromium plating options
- Quick-clean valve housing design option

CERTIFICATIONS & STANDARDS

- NFPA 69 Compliant - ATEX Certified EN 15089
- OSHA Compliant drive guard for the Explosion Isolation Model
- External bearing design, 8-vane rotary blade for the Explosion Isolation
- Certified to prevent flame passage for Passive Explosion Isolation

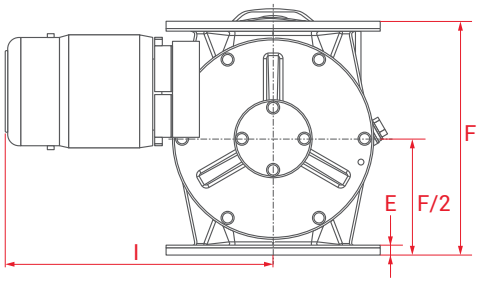

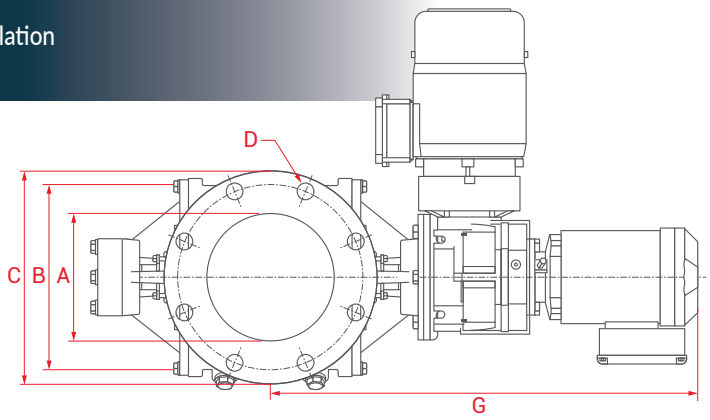

DIMENSIONS *												
MODEL	15 RPM HP	30 RPM HP	CAPACITY FT³ (LTR)	Ø A	Ø B	Ø C	D	E	F	G	H	I
MD150	0.50	0.75	0.10 (3)/rev	**6”** (150 mm)	9” (240 mm)	11” (285 mm)	8 x Ø23 mm	0.51” (13 mm)	10” (260 mm)		13” (330 mm)	14” (355 mm)
MD200	0.75	1.50	0.39 (11)/rev	**8”** (200 mm)	12” (300 mm)	13” (340 mm)	8 x Ø23 mm	0.51” (13 mm)	15” (370 mm)		16” (400 mm)	21” (525 mm)
MD250	1.00	1.00	0.74 (21)/rev	**10”** (250 mm)	14” (350 mm)	16” (395 mm)	12 x Ø23 mm	0.67” (17 mm)	17” (425 mm)	30” (770 mm)		
MD300	1.50	3.00	1.30 (37)/rev	**12”** (300 mm)	16” (400 mm)	18” (445 mm)	12 x Ø23 mm	0.79” (20 mm)	20” (500 mm)	33” (840 mm)		

Columns G, H and I depend on drive

** Units in inches rounded to the closest whole number*

copyright 2022 Boss Products, LLC

HTS SERIES

Ideal for dust collectors, cyclones, silos, hoppers, and specialized process applications

Sizes: 10” & 14”

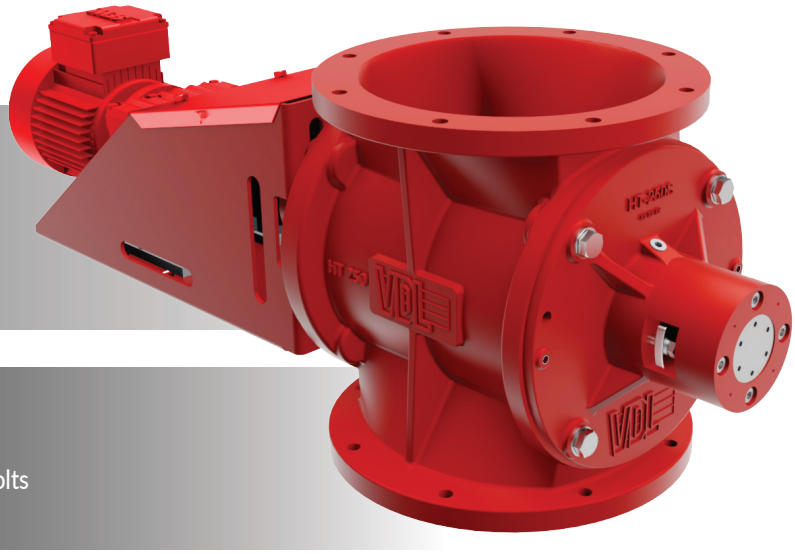

STANDARD FEATURES

- Cast iron housing with safety red finish EX version
- Explosion and Flame Proof design rated up to 25 PSI / 670” WC
- Airlock in high vacuum installations - applications up to 160” WC
- Direct drive gearmotor with flex coupling

OPTIONAL FEATURES

- Variable speed drive control option
- Square to round flange adapter including gasket and mounting bolts
- Quick-clean valve housing design option

CERTIFICATIONS & STANDARDS

- NFPA 69 Compliant - ATEX Certified EN 15089
- OSHA Compliant drive guard for the Explosion Isolation Model
- External bearing design, 8-vane rotary blade for the Explosion Isolation
- Flex tip design certified to prevent flame passage for Passive Explosion Isolation

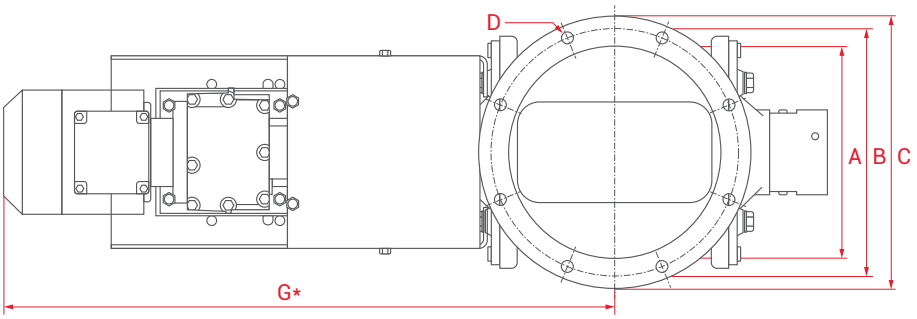

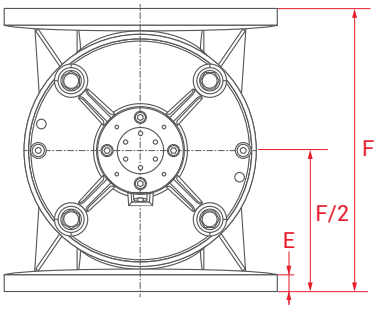

DIMENSIONS*										
MODEL	15 RPM HP	30 RPM HP	CAPACITY FT³ (LTR)	Ø A	Ø B	Ø C	D	E	F*	G
HTS250	0.33	0.75	0.24 (7)/rev	**10”** (250 mm)	12” (290 mm)	13” (320 mm)	8 x Ø12 mm	0.79” (20 mm)	13” (330 mm)	28” (710 mm)
HTS350	0.50	1.00	0.70 (20)/rev	**14”** (340 mm)	15” (390 mm)	17” (420 mm)	8 x Ø12 mm	0.79” (20 mm)	16” (400 mm)	33” (830 mm)

SQUARE TO ROUND TRANSITIONS					
SQUARE TRANSITION (Nominal Size Inches)	6X6	8X8	10X10	12X12	14X14
SRT	HTS250	HTS250	HTS250	HTS350	HTS350
Transition Height	2.84” (72 mm)	2.80” (71 mm)	2.80” (71 mm)	2.80” (71 mm)	2.80” (71 mm)
Overall Height (Dim F + Transition Height)	16” (402 mm)	16” (401 mm)	16” (401 mm)	19” (471 mm)	19” (471 mm)

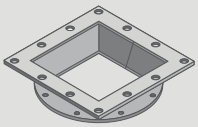

** Length varies dependent on motor selection — Units in inches rounded to the closest whole number*

copyright 2022 Boss Products, LLC

HT SERIES

Feeder valve for screw conveyors, scales, dryers and coolers

Sizes: 10”, 14” & 18”

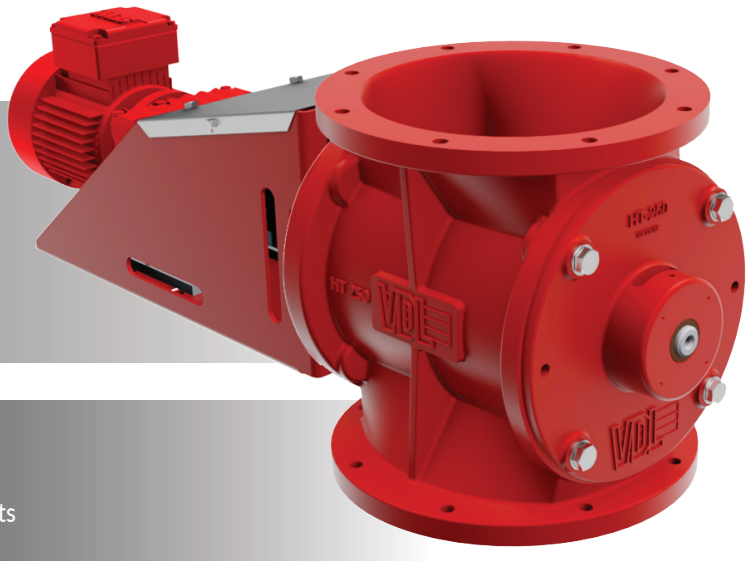

STANDARD FEATURES

- Cast iron housing with safety red finish EX version
- Differential pressures up to 40” WC
- Direct drive gearmotor with flex coupling
- Airlock in dust collector and cyclone installations
- Explosion and Flame Proof design rated up to 25 PSI / 670” WC

OPTIONAL FEATURES

- Variable speed drive control option
- Square to round flange adapter including gasket and mounting bolts

CERTIFICATIONS & STANDARDS

- NFPA 69 Compliant - ATEX Certified EN 15089
- OSHA Compliant drive guard for the Explosion Isolation Model
- Flex tip design certified to prevent flame passage for Passive Explosion Isolation

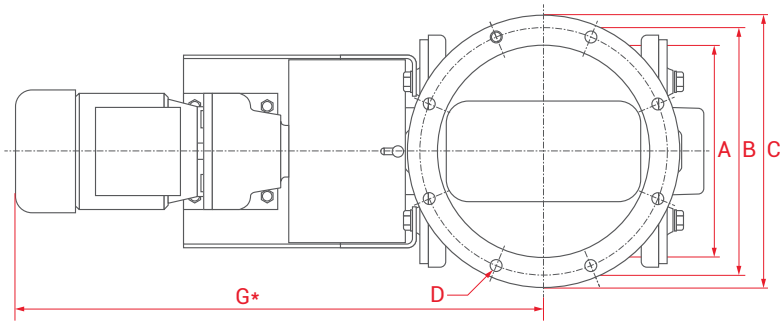

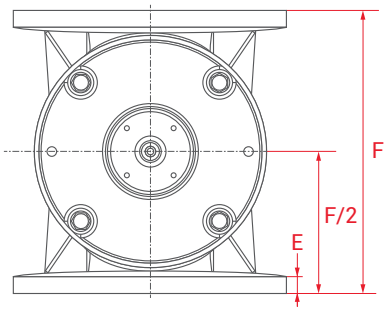

DIMENSIONS*										
MODEL	15 RPM HP	30 RPM HP	CAPACITY FT³ (LTR)	Ø A	Ø B	Ø C	D	E	F*	G
HT250	0.33	0.75	0.24 (7)/rev	**10”** (250 mm)	12” (290 mm)	13” (320 mm)	8 x Ø12 mm	0.79” (20 mm)	13” (330 mm)	24” (620 mm)
HT350	0.50	1.00	0.70 (20)/rev	**14”** (340 mm)	15” (390 mm)	17” (420 mm)	8 x Ø12 mm	0.79” (20 mm)	16” (400 mm)	26” (670 mm)
HT450	1.00	2.00	1.23 (35)/rev	**17”** (420 mm)	19” (490 mm)	21” (525 mm)	8 x Ø12 mm	0.79” (20 mm)	20” (500 mm)	33” (850 mm)

SQUARE TO ROUND TRANSITIONS*						
SQUARE TRANSITION (Nominal Size Inches)	6X6	8X8	10X10	12X12	14X14	16X16
SRT	HT250	HT250	HT250	HT350	HT350	HT450
Transition Height	2.84” (72 mm)	2.80” (71 mm)	2.80” (71 mm)	2.80” (71 mm)	2.80” (71 mm)	3.43” (87 mm)
Overall Height (Dim F + Transition Height)	16” (402 mm)	16” (401 mm)	16” (401 mm)	19” (471 mm)	19” (471 mm)	23” (587 mm)

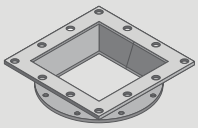

** Length varies dependent on motor selection — Units in inches rounded to the closest whole number*

copyright 2022 Boss Products, LLC

BS SERIES

Ideal for wood applications

Sizes: 20”x 20”, 20”x 30”, 20”x 40” & 20”x 60”

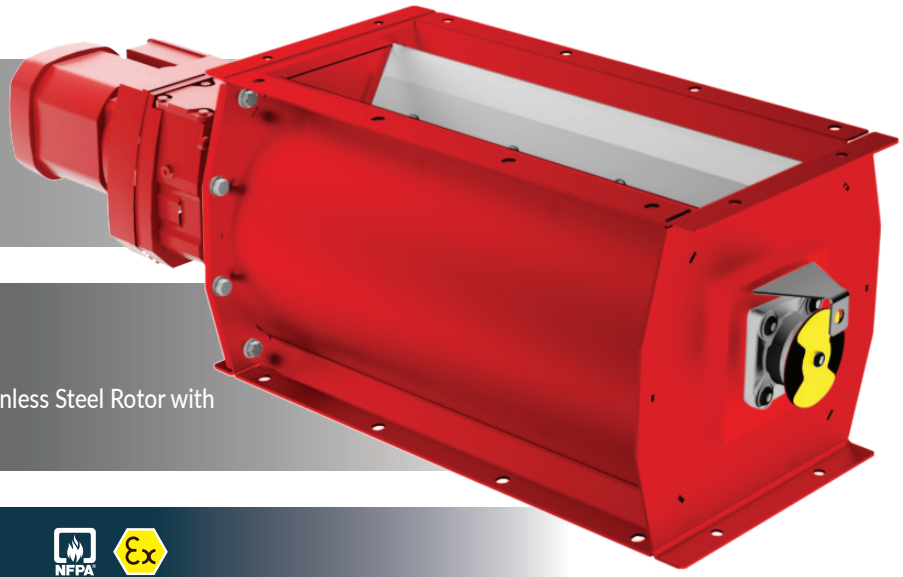

STANDARD FEATURES

- Differential pressures up to 28” WC
- Direct drive gearmotor with flex coupling
- Explosion and flame proof to 7.25 PSI / 201” WC

OPTIONAL FEATURES

- Default: Steel with Neoprene Tip Rotor Blades
- Optional: Steel Rotor with Silicone Tip Blades or Stainless Steel Rotor with Polyurethane Tip Blades

CERTIFICATIONS & STANDARDS

- NFPA 69 Compliant - ATEX Certified EN 15089
- OSHA Compliant drive guard for the Explosion Isolation Model
- External bearing design, 8-vane rotary blade for the Explosion Isolation
- Flex tip design certified to prevent flame passage for Passive Explosion Isolation

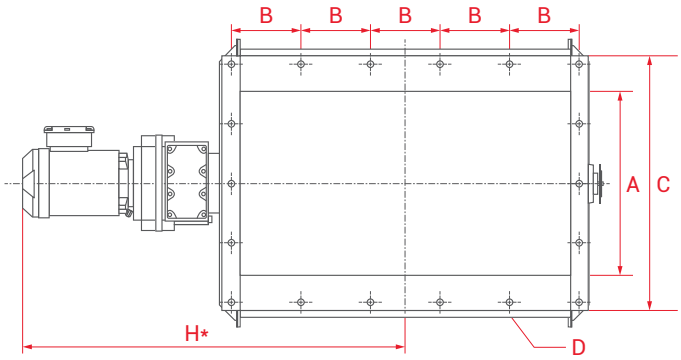

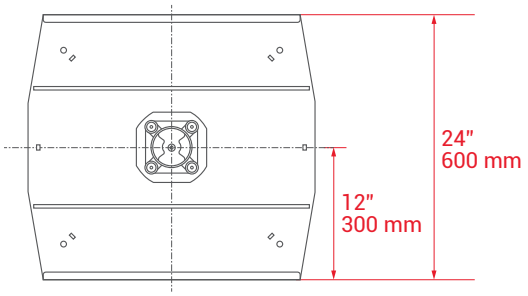

DIMENSIONS *								
MODEL	15 RPM HP	22 RPM HP	CAPACITY FT³ (LTR)	A	B	C	D	H
BS500	1.00		4.41 (125)/rev	**20” x 20”** (500 x 500 mm)	0.16” x 5.30” (4 x 135 mm)	23” x 23” (580 x 580 mm)	16 x Ø 10.5 mm	30” (742 mm)
BS750	1.00		6.64 (188)/rev	**20” x 30”** (500 x 750 mm)	0.20” x 6.22” (5 x 158 mm)	23” x 33” (580 x 830 mm)	18 x Ø 10.5 mm	34” (867 mm)
BS1000	1.50		8.83 (250)/rev	**20” x 40”** (500 x 1000 mm)	0.31” x 5.12” (8 x 130 mm)	23” x 43” (580 x 1080 mm)	24 x Ø 10.5 mm	40” (997 mm)

Available as BS, Rotary valve with explosion detector and control – Available as BS, Rotary valve only
** Length varies dependent on motor selection – Units in inches rounded to the closest whole number*

copyright 2022 Boss Products, LLC

Rotors

Rotary Valve Rotors are available with a wide range of replaceable blades to handle just about any application.
All listed Rotors are NFPA 69 Compliant for Explosion Isolation, this includes the Neoprene and Polyurethane Tip Rotor Blades.

		BLADE MATERIAL		
PRODUCT CHARACTERISTICS		POLYURETHANE	STEEL	STAINLESS STEEL
POWDERS	*Not abrasive*	X	X	X
	Abrasive	X		
	Sticky		X	X
	Corrosive			X
GRANULATES		X		
FIBROUS MATERIAL		X		

	MD SERIES	HT/HTS SERIES	BS SERIES
Polyurethane	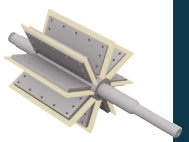 **MD: Steel** Polyurethane tips *8 vanes*	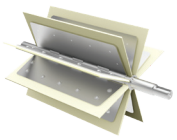 **HT/HTS: Steel** Polyurethane tips *8 vanes*	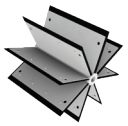 **BS: Steel** Neoprene tips *8 vanes*
Steel	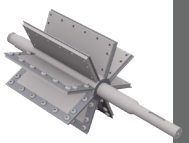 **MD: Steel** Steel tips *8 vanes*	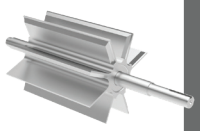 **HTS: Manganese Steel** Manganese Steel chamfered tips *8 vanes*	
Stainless Steel	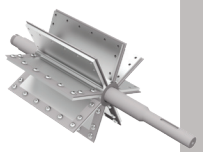 **MD: Stainless Steel** Stainless Steel tips *8 vanes*	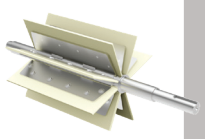 **HTS: Stainless Steel** Polyurethane tips *8 vanes* 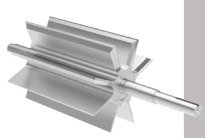 **HTS: Stainless Steel** Stainless Steel chamfered tips *8 vanes*	

15 RPM AND 30 RPM MOTORS ARE AVAILABLE WITH SPEED CONTROLS

copyright 2022 Boss Products, LLC

Accessories

Accessories to maximize the effectiveness and safety of the valve.

Discharge Blow-Through Adapter

Used to introduce metered product from the airlock into a pneumatic airstream. Stainless Steel construction available in diameters 2⅜"-6".

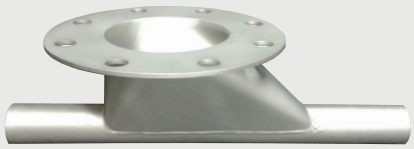

Tube diameter	MODEL			
in.	MD 150	MD 200	MD 250	MD 300
2⅜	X			
3.0	X			
3.5	X	X		
4.0		X	X	
4¼		X	X	
4.5			X	X
5.5				X
6.0				X

Insulation Boxes

Insulation boxes are available for applications requiring operation in extreme heat or cold conditions.

Replacement Gaskets in EPDM & Silicone

Factory precision cut gasketing is available in EPDM or Silicone.

Special Sanitary designs

Quick-clean valve housing design options - MD & HTS only.

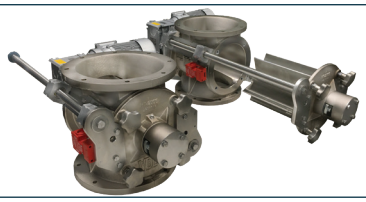

Speed Sensors

Detects rotor RPM for speed control.

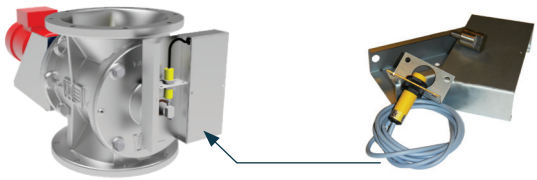

Capacity Limiter with Polyurethane Blade

Prevents the overfilling of the rotor chamber.
Helps prevent product damage.

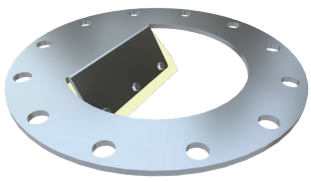

Air Purge Seal Kit

Creates an overpressure which keeps abrasive powders out of bearings & seals.

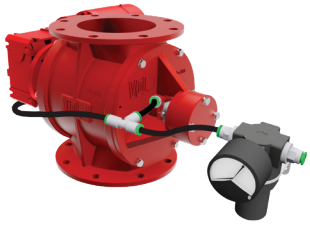

copyright 2022 Boss Products, LLC

BOSS Process™

PEOPLE. PARTNERSHIP. PERFORMANCE.

NFPA®

ISO 9001:2015 CERTIFIED COMPANY

PRI Registrar
PERFORMANCE REVIEW INSTITUTE

Boss Process™ is the Exclusive North American distributor of VDL

VDL INDUSTRIAL PRODUCTS

HERE TO SUPPORT OUR PARTNERS:

Professional staff to provide technical support for your sales and installation questions.

Qualifying questions:

- Materials?
- System needs overview?
- Pressure requirements?

Let us know how we can help: Process@bossproductsamerica.com

A division of BOSS PRODUCTS LLC

6729 GUADA COMA DR. - SCHERTZ, TX 78154 -USA - Main # 210-664-4200

process@bossproductsamerica.com | www.bossproductsamerica.com

copyright 2022 Boss Products, LLC | Graphic Design: AVANTI®